VERSA-LINE

Submittal

VA-C / VB-C
Versa-Line
Copper/Aluminum and
Steel Element Ratings

Specification

☐ **VA-C Flat Top Element Supported Enclosure**

ENCLOSURE:

STYLE: Flat Top, Top Outlet
OUTLET: Stamped Louvers
Pencil Proof

LENGTHS: 2'0" thru 8'0" in 6" Increments
MAT'L:
- ☐ 18 Ga. CRS (Std)
- ☐ 16 Ga. CRS (Opt'l)
- ☐ 14 Ga. CRS (Opt'l)
- ☐ 18 Ga. Stainless Steel (Opt'l)
- ☐ 16 Ga. Stainless Steel (Opt'l)
- ☐ 14 Ga. Stainless Steel (Opt'l)
- ☐ 16 Ga. Aluminum (Opt'l)
- ☐ 14 Ga. Aluminum (Opt'l)
- ☐ 12 Ga. Aluminum (Opt'l)

HEIGHT:
- ☐ 5 5/8" (VA-C only)
- ☐ 6 1/8" (VB-C only)
- ☐ 11 5/8" (VA-C only)
- ☐ 12 1/8" (VB-C only)
- ☐ 17 5/8" (VA-C only)
- ☐ 18 1/8" (VB-C only)

FINISH:
- ☐ Baked Powder (Std)
- ☐ Baked Metallic (Opt'l)

ELEMENT:

TYPE: ☐ Cu/AL (Mechanically Expanded)
LENGTHS: 2'0" thru 12'6" in 1" Increments for 1" & 1-1/4" Cu.
2'0" thru 8'0" in 1" Increments for 3/4" Cu.

One End Flared (Std)

TYPE: ☐ IPS Steel (Mechanically Expanded)
LENGTHS: 2'0" thru 12'6" in 1" Increments
- ☐ NPT Thread both Ends (Std)
- ☐ Beveled Ends for Field Weld (Opt'l)

See Catalog for Working Pressures

☐ **VB-C Flat Top Element Supported Enclosure**

BACKPLATE:

TYPE: Not Applicable

BRACKETS:

- ☐ Wall Mtd B.B. Hngr (Copper or steel elements)
- ☐ Pipe & Cover Supports (Steel elements only)

ACCESSORIES:

☐ All Overlapping Type

☐ VA-C

ELEMENT TUBE SIZE	FIN SIZE HEIGHT x WIDTH	CRADLE NUMBER	A	B
3/4 COPPER	3 1/4 x 3 1/4	2	6 15/16	6 1/8
1" COPPER	3 1/4 x 3 1/4	2	6 15/16	5 15/16
1 1/4 COPPER	3 1/4 x 3 1/4	1	6 15/16	6 1/2
1" STEEL	3 1/4 x 3 1/4	2	6 15/16	5 13/16
1 1/4 STEEL	3 1/4 x 3 1/4	1	6 15/16	6 5/16

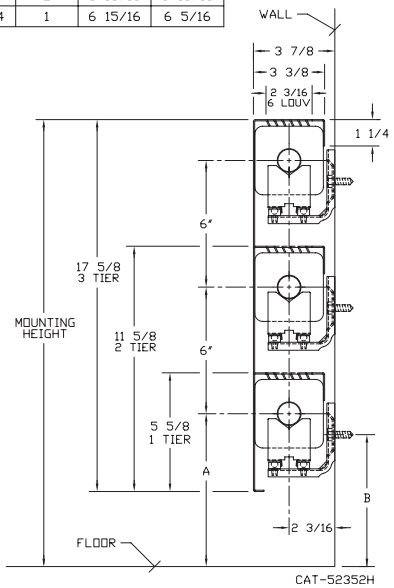

☐ VB-C

ELEMENT TUBE SIZE	FIN SIZE HEIGHT x WIDTH	CRADLE NUMBER	A	B
3/4 COPPER	3 5/8 x 4 1/4	2	7 1/4	6 7/16
	4 1/4 x 4 1/4	3A	6 15/16	5 11/16
1" COPPER	3 5/8 x 4 1/4	2	7 1/4	6 1/4
	4 1/4 x 4 1/4		6 15/16	5 15/16
1 1/4 COPPER	3 5/8 x 4 1/4	2	7 1/4	6 1/8
	4 1/4 x 4 1/4		6 15/16	5 13/16
1" STEEL	4 1/4 x 4 1/4	2	6 15/16	5 13/16
1 1/4 STEEL	4 1/4 x 4 1/4	2	6 15/16	5 5/8
2" STEEL	4 1/4 x 4 1/4	1	6 15/16	5 7/8

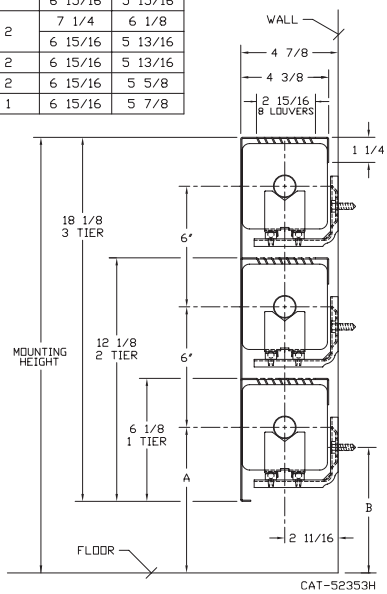

STERLING®
COMMERCIAL HYDRONIC PRODUCTS
260 North Elm St., Westfield, MA 01085
(413) 564-5535 Fax: (413) 562-8437
www.sterlingheat.com

MADE IN THE USA

10/22

PROJECT: _____ **DATE:** _____
LOCATION: _____
ARCHITECT: _____
ENGINEER: _____
CONTRACTOR: _____
PO NUMBER: _____

STYLE "VA-C / VB-C" VERSA-LINE

COPPER/ALUMINUM ELEMENTS

ALL RATINGS ARE IN BTU/HR/LIN FT AND BASED ON 3 FPS VELOCITY, 65° EAT

TUBE SIZE	CATALOG DESIGNATION	FIN SIZE HEIGHT X WIDTH	FINS PER FT.	FIN THICKNESS IN INCHES	ENCL DEPTH AND HEIGHT IN INCHES	TIERS AND CENTERS IN INCHES	MOUNTING HEIGHT IN INCHES	STEAM 215° FACTOR	HOT WATER (AVG.) 200°	190°	180°	170°	160°	150°	140°	130°	120°
									CORRECTION FACTORS FOR AVERAGE WATER TEMPERATURES								
								1.00	0.86	0.78	0.69	0.61	0.53	0.45	.40	.33	.26
3/4"	C3/4-33	3-1/4" SQ.	32	.020	5A	1	8-7/8	870	750	680	600	530	460	390	350	290	230
					11A	2 @ 6 CL	14-7/8	1460	1260	1140	1010	890	770	660	580	480	380
					17A	3 @ 6 CL	20-7/8	1930	1660	1510	1330	1180	1020	870	770	640	500
3/4"	C3/4-34	3-1/4" SQ.	40	.020	5A	1	8-7/8	1030	890	800	710	630	550	460	410	340	270
					11A	2 @ 6 CL	14-7/8	1600	1380	1250	1100	980	850	720	640	530	420
					17A	3 @ 6 CL	20-7/8	2060	1770	1610	1420	1260	1090	930	820	680	540
3/4"	C3/4-35	3-1/4" SQ.	50	.020	5A	1	8-7/8	1130	970	880	780	690	600	510	450	370	290
					11A	2 @ 6 CL	14-7/8	1710	1470	1330	1180	1040	910	770	680	560	440
					17A	3 @ 6 CL	20-7/8	2150	1850	1680	1480	1310	1140	970	860	710	560
1"	C33	3-1/4" SQ.	32	.020	5A	1	8-7/8	870	750	680	600	530	460	390	350	290	230
					11A	2 @ 6 CL	14-7/8	1460	1260	1140	1010	890	770	660	580	480	380
					17A	3 @ 6 CL	20-7/8	1900	1630	1480	1310	1160	1010	860	760	630	490
1"	C34	3-1/4" SQ.	40	.020	5A	1	8-7/8	970	830	760	670	590	510	440	390	320	250
					11A	2 @ 6 CL	14-7/8	1570	1350	1220	1080	960	830	710	630	520	410
					17A	3 @ 6 CL	20-7/8	1990	1710	1550	1370	1210	1050	900	800	660	520
1"	C35	3-1/4" SQ.	50	.020	5A	1	8-7/8	1090	940	850	750	660	580	490	440	360	280
					11A	2 @ 6 CL	14-7/8	1650	1420	1290	1140	1010	870	740	660	540	430
					17A	3 @ 6 CL	20-7/8	2080	1790	1620	1440	1270	1100	940	830	690	540
1-1/4"	C133	3-1/4" SQ.	32	.020	5A	1	8-7/8	870	750	680	600	530	460	390	350	290	230
					11A	2 @ 6 CL	14-7/8	1430	1230	1120	990	870	760	640	570	470	370
					17A	3 @ 6 CL	20-7/8	1890	1630	1470	1300	1150	1000	850	760	620	490
1-1/4"	C134	3-1/4" SQ.	40	.020	5A	1	8-7/8	950	820	740	660	580	500	430	380	310	250
					11A	2 @ 6 CL	14-7/8	1560	1340	1220	1080	950	830	700	620	510	410
					17A	3 @ 6 CL	20-7/8	1960	1690	1530	1350	1200	1040	880	780	650	510
1-1/4"	C135	3-1/4" SQ.	50	.020	5A	1	8-7/8	1050	900	820	720	640	560	470	420	350	270
					11A	2 @ 6 CL	14-7/8	1620	1390	1260	1120	990	860	730	650	530	420
					17A	3 @ 6 CL	20-7/8	2040	1750	1590	1410	1240	1080	920	820	670	530
3/4"	C3/4-433	3-5/8" X 4-1/4"	32	.020	6B	1	9-3/8	1090	940	850	750	660	580	490	440	360	280
					12B	2 @ 6 CL	15-3/8	1810	1560	1410	1250	1100	960	810	720	600	470
					18B	3 @ 6 CL	21-3/8	2300	1980	1790	1590	1400	1220	1040	920	760	600
3/4"	C3/4-434	3-5/8" X 4-1/4"	40	.020	6B	1	9-3/8	1310	1130	1020	900	800	690	590	520	430	340
					12B	2 @ 6 CL	15-3/8	2120	1820	1650	1460	1290	1120	950	850	700	550
					18B	3 @ 6 CL	21-3/8	2640	2270	2060	1820	1610	1400	1190	1060	870	690
3/4"	C3/4-435	3-5/8" X 4-1/4"	50	.020	6B	1	9-3/8	1440	1240	1120	990	880	760	650	580	480	370
					12B	2 @ 6 CL	15-3/8	2250	1940	1760	1550	1370	1190	1010	900	740	590
					18B	3 @ 6 CL	21-3/8	2760	2370	2150	1900	1680	1460	1240	1100	910	720
1"	C433	3-5/8" X 4-1/4"	32	.020	6B	1	9-3/8	1130	970	880	780	690	600	510	450	370	290
					12B	2 @ 6 CL	15-3/8	1890	1630	1470	1300	1150	1000	850	760	620	490
					18B	3 @ 6 CL	21-3/8	2400	2060	1870	1660	1460	1270	1080	960	790	620
1"	C434	3-5/8" X 4-1/4"	40	.020	6B	1	9-3/8	1270	1090	990	880	770	670	570	510	420	330
					12B	2 @ 6 CL	15-3/8	2060	1770	1610	1420	1260	1090	930	820	680	540
					18B	3 @ 6 CL	21-3/8	2560	2200	2000	1770	1560	1360	1150	1020	840	670
1"	C435	3-5/8" X 4-1/4"	50	.020	6B	1	9-3/8	1440	1240	1120	990	880	760	650	580	480	370
					12B	2 @ 6 CL	15-3/8	2240	1930	1750	1550	1370	1190	1010	900	740	580
					18B	3 @ 6 CL	21-3/8	2760	2370	2150	1900	1680	1460	1240	1100	910	720
1-1/4"	C1433	3-5/8" X 4-1/4"	32	.020	6B	1	9-3/8	1180	1010	920	810	720	630	530	470	390	310
					12B	2 @ 6 CL	15-3/8	1960	1690	1530	1350	1200	1040	880	780	650	510
					18B	3 @ 6 CL	21-3/8	2500	2150	1950	1720	1530	1330	1130	1000	830	650
1-1/4"	C1434	3-5/8" X 4-1/4"	40	.020	6B	1	9-3/8	1300	1120	1010	900	790	690	590	520	430	340
					12B	2 @ 6 CL	15-3/8	2100	1810	1640	1450	1280	1110	950	840	690	550
					18B	3 @ 6 CL	21-3/8	2610	2240	2040	1800	1590	1380	1170	1040	860	680
1-1/4"	C1435	3-5/8" X 4-1/4"	50	.020	6B	1	9-3/8	1440	1240	1120	990	880	760	650	580	480	370
					12B	2 @ 6 CL	15-3/8	2250	1940	1760	1550	1370	1190	1010	900	740	590
					18B	3 @ 6 CL	21-3/8	2770	2380	2160	1910	1690	1470	1250	1110	910	720
3/4"	C3/4 43	4-1/4" SQ.	32	.020	6B	1	9-3/8	1210	1040	940	830	740	640	540	480	400	310
					12B	2 @ 6 CL	15-3/8	1990	1710	1550	1370	1210	1050	900	800	660	520
					18B	3 @ 6 CL	21-3/8	2560	2200	2000	1770	1560	1360	1150	1020	840	670
3/4"	C3/4 44	4-1/4" SQ.	40	.020	6B	1	9-3/8	1440	1240	1120	990	880	760	650	580	480	370
					12B	2 @ 6 CL	15-3/8	2160	1860	1680	1490	1320	1140	970	860	710	560
					18B	3 @ 6 CL	21-3/8	2660	2290	2070	1840	1620	1410	1200	1060	880	690
3/4"	C3/4 45	4-1/4" SQ.	50	.020	6B	1	9-3/8	1490	1280	1160	1030	910	790	670	600	490	390
					12B	2 @ 6 CL	15-3/8	2230	1920	1740	1540	1360	1180	1000	890	740	580
					18B	3 @ 6 CL	21-3/8	2740	2360	2140	1890	1670	1450	1230	1100	900	710
1"	C43	4-1/4" SQ.	32	.020	6B	1	9-3/8	1210	1040	940	830	740	640	540	480	400	310
					12B	2 @ 6 CL	15-3/8	2010	1730	1570	1390	1230	1070	900	800	660	520
					18B	3 @ 6 CL	21-3/8	2580	2220	2010	1780	1570	1370	1160	1030	850	670

STYLE "VA-C / VB-C" VERSA-LINE

COPPER/ALUMINUM ELEMENTS

ALL RATINGS ARE IN BTU/HR/LIN FT AND BASED ON 3 FPS VELOCITY, 65° EAT

TUBE SIZE	CATALOG DESIGNATION	FIN SIZE HEIGHT X WIDTH	FINS PER FT.	FIN THICKNESS IN INCHES	ENCL DEPTH AND HEIGHT IN INCHES	TIERS AND CENTERS IN INCHES	MOUNTING HEIGHT IN INCHES	STEAM 215° FACTOR	HOT WATER (AVG.) 200°	190°	180°	170°	160°	150°	140°	130°	120°
									CORRECTION FACTORS FOR AVERAGE WATER TEMPERATURES								
								1.00	0.86	0.78	0.69	0.61	0.53	0.45	.40	.33	.26
1"	C44	4-1/4" SQ.	40	.020	6B	1	9-3/8	1340	1150	1050	920	820	710	600	540	440	350
					12B	2 @ 6 CL	15-3/8	2120	1820	1650	1460	1290	1120	950	850	700	550
					18B	3 @ 6 CL	21-3/8	2660	2290	2070	1840	1620	1410	1200	1060	880	690
1"	C45	4-1/4" SQ.	50	.020	6B	1	9-3/8	1510	1300	1180	1040	920	800	680	600	500	390
					12B	2 @ 6 CL	15-3/8	2250	1940	1760	1550	1370	1190	1010	900	740	590
					18B	3 @ 6 CL	21-3/8	2770	2380	2160	1910	1690	1470	1250	1110	910	720
1-1/4"	C143	4-1/4" SQ.	32	.020	6B	1	9-3/8	1260	1080	980	870	770	670	570	500	420	330
					12B	2 @ 6 CL	15-3/8	2100	1810	1640	1450	1280	1110	950	840	690	550
					18B	3 @ 6 CL	21-3/8	2690	2310	2100	1860	1640	1430	1210	1080	890	700
1-1/4"	C144	4-1/4" SQ.	40	.020	6B	1	9-3/8	1490	1280	1160	1030	910	790	670	600	490	390
					12B	2 @ 6 CL	15-3/8	2280	1960	1780	1570	1390	1210	1030	910	750	590
					18B	3 @ 6 CL	21-3/8	2790	2400	2180	1930	1700	1480	1260	1120	920	730
1-1/4"	C145	4-1/4" SQ.	50	.020	6B	1	9-3/8	1540	1320	1200	1060	940	820	690	620	510	400
					12B	2 @ 6 CL	15-3/8	2090	1800	1630	1440	1270	1110	940	840	690	540
					18B	3 @ 6 CL	21-3/8	2560	2200	2000	1770	1560	1360	1150	1020	840	670

Note: Copper tube furnished flared one end standard.

STEEL ELEMENTS

ALL RATINGS ARE IN BTU/HR/LIN FT AND BASED ON 3 FPS VELOCITY, 65° EAT

TUBE SIZE	CATALOG DESIGNATION	FIN SIZE HEIGHT X WIDTH	FINS PER FT.	FIN THICKNESS IN INCHES	ENCL DEPTH AND HEIGHT IN INCHES	TIERS AND CENTERS IN INCHES	MOUNTING HEIGHT IN INCHES	STEAM 215° FACTOR	HOT WATER (AVG.) 200°	190°	180°	170°	160°	150°	140°	130°	120°
									CORRECTION FACTORS FOR AVERAGE WATER TEMPERATURES								
								1.00	0.86	0.78	0.69	0.61	0.53	0.45	.40	.33	.26
1"	S33	3-1/4" SQ.	32	.032	5A	1	8-7/8	820	710	640	570	500	430	370	330	270	210
					11A	2 @ 6 CL	14-7/8	1340	1150	1050	920	820	710	600	540	440	350
					17A	3 @ 6 CL	20-7/8	1760	1510	1370	1210	1070	930	790	700	580	460
1"	S34	3-1/4" SQ.	40	.032	5A	1	8-7/8	890	770	690	610	540	470	400	360	290	230
					11A	2 @ 6 CL	14-7/8	1450	1250	1130	1000	880	770	650	580	480	380
					17A	3 @ 6 CL	20-7/8	1880	1620	1470	1300	1150	1000	850	750	620	490
1"	S35	3-1/4" SQ.	50	.032	5A	1	8-7/8	950	820	740	660	580	500	430	380	310	250
					11A	2 @ 6 CL	14-7/8	1520	1310	1190	1050	930	810	680	610	500	400
					17A	3 @ 6 CL	20-7/8	1960	1690	1530	1350	1200	1040	880	780	650	510
1-1/4"	S133	3-1/4" SQ.	32	.032	5A	1	8-7/8	810	700	630	560	490	430	360	320	270	210
					11A	2 @ 6 CL	14-7/8	1380	1190	1080	950	840	730	620	550	460	360
					17A	3 @ 6 CL	20-7/8	1790	1540	1400	1240	1090	950	810	720	590	470
1-1/4"	S134	3-1/4" SQ.	40	.032	5A	1	8-7/8	900	770	700	620	550	480	410	360	300	230
					11A	2 @ 6 CL	14-7/8	1450	1250	1130	1000	880	770	650	580	480	380
					17A	3 @ 6 CL	20-7/8	1800	1550	1400	1240	1100	950	810	720	590	470
1-1/4"	S135	3-1/4" SQ.	50	.032	5A	1	8-7/8	930	800	730	640	570	490	420	370	310	240
					11A	2 @ 6 CL	14-7/8	1490	1280	1160	1030	910	790	670	600	490	390
					17A	3 @ 6 CL	20-7/8	1820	1570	1420	1260	1110	960	820	730	600	470
1"	S43	4-1/4" SQ.	32	.032	6B	1	9-3/8	1190	1020	930	820	730	630	540	480	390	310
					12B	2 @ 6 CL	15-3/8	1970	1690	1540	1360	1200	1040	890	790	650	510
					18B	3 @ 6 CL	21-3/8	2440	2100	1900	1680	1490	1290	1100	980	810	630
1"	S44	4-1/4" SQ.	40	.032	6B	1	9-3/8	1340	1150	1050	920	820	710	600	540	440	350
					12B	2 @ 6 CL	15-3/8	2080	1790	1620	1440	1270	1100	940	830	690	540
					18B	3 @ 6 CL	21-3/8	2540	2180	1980	1750	1550	1350	1140	1020	840	660
1"	S45	4-1/4" SQ.	50	.032	6B	1	9-3/8	1420	1220	1110	980	870	750	640	570	470	370
					12B	2 @ 6 CL	15-3/8	2130	1830	1660	1470	1300	1130	960	850	700	550
					18B	3 @ 6 CL	21-3/8	2580	2220	2010	1780	1570	1370	1160	1030	850	670
1-1/4"	S143	4-1/4" SQ.	32	.032	6B	1	9-3/8	1100	950	860	760	670	580	500	440	360	290
					12B	2 @ 6 CL	15-3/8	1960	1690	1530	1350	1200	1040	880	780	650	510
					18B	3 @ 6 CL	21-3/8	2420	2080	1890	1670	1480	1280	1090	970	800	630
1-1/4"	S144	4-1/4" SQ.	40	.032	6B	1	9-3/8	1330	1140	1040	920	810	700	600	530	440	350
					12B	2 @ 6 CL	15-3/8	2070	1780	1610	1430	1260	1100	930	830	680	540
					18B	3 @ 6 CL	21-3/8	2540	2180	1980	1750	1550	1350	1140	1020	840	660
1-1/4"	S145	4-1/4" SQ.	50	.032	6B	1	9-3/8	1400	1200	1090	970	850	740	630	560	460	360
					12B	2 @ 6 CL	15-3/8	2090	1800	1630	1440	1270	1110	940	840	690	540
					18B	3 @ 6 CL	21-3/8	2560	2200	2000	1770	1560	1360	1150	1020	840	670
2"	S242	4-1/4" SQ.	25	.032	6B	1	9-3/8	1030	890	800	710	630	550	460	410	340	270
					12B	2 @ 6 CL	15-3/8	1730	1490	1350	1190	1060	920	780	690	570	450
					18B	3 @ 6 CL	21-3/8	2160	1860	1680	1490	1320	1140	970	860	710	560
2"	S243	4-1/4" SQ.	32	.032	6B	1	9-3/8	1190	1020	930	820	730	630	540	480	390	310
					12B	2 @ 6 CL	15-3/8	1900	1630	1480	1310	1160	1010	860	760	630	490
					18B	3 @ 6 CL	21-3/8	2330	2000	1820	1610	1420	1230	1050	930	770	610

Notes: 1) Steel fins furnished as .032 thick, painted black.
2) NPT threads furnished on steel elements. Please use domestic fittings for proper installation.
3) The ends can be provided chamfered for field welded fittings when specified.

STYLE “VA-C / VB-C” VERSA-LINE

STYLE C ACCESSORIES

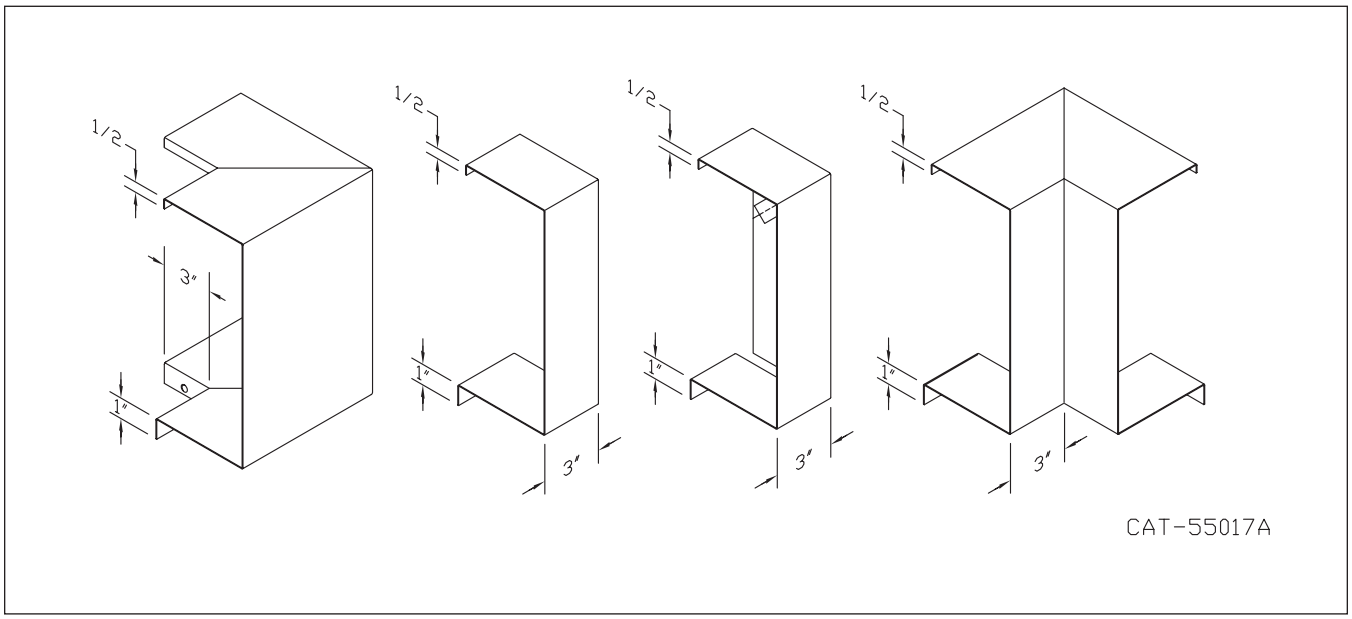

Design Data

COMMERCIAL FINNED TUBE CHARTS FOR RATING CORRECTIONS

For assistance with ratings and selection, please use our online Specifier.

CORRECTION FACTORS FOR WATER TEMPERATURES AND AIR TEMPERATURES OTHER THAN STANDARD

AVERAGE WATER TEMP. °F	ENTERING AIR TEMPERATURE °F														
	45	55	STD 65	70	75	80	85	90	95	100	110	120	130	140	150
90	.19	.13	.11	.06											
100	.25	.19	.15	.11	.08	.06									
110	.31	.25	.20	.16	.13	.11	.08	.06							
120	.38	.31	.26	.21	.19	.16	.13	.11	.08	.06					
130	.45	.38	.33	.28	.25	.21	.19	.16	.13	.11	.06				
140	.53	.45	.40	.34	.31	.28	.25	.21	.19	.16	.11	.06			
150	.61	.53	.45	.41	.38	.34	.31	.28	.25	.21	.16	.11	.06		
160	.69	.61	.53	.49	.45	.41	.38	.34	.31	.28	.21	.16	.11	.06	
170	.77	.69	.61	.57	.53	.49	.45	.41	.38	.34	.28	.21	.16	.11	.06
180	.86	.77	.69	.65	.61	.57	.53	.49	.45	.41	.34	.28	.21	.16	.11
190	.95	.86	.78	.73	.69	.65	.61	.57	.53	.49	.41	.34	.28	.21	.16
200	1.05	.95	.86	.82	.77	.73	.69	.65	.61	.57	.49	.41	.34	.28	.21
210	1.14	1.05	.95	.91	.86	.82	.77	.73	.69	.65	.57	.49	.41	.34	.28
▶ 215 (STD.)	1.19	1.09	1.00	.95	.91	.86	.82	.77	.73	.69	.61	.53	.45	.38	.31
220	1.24	1.14	1.05	1.00	.95	.91	.86	.82	.77	.73	.65	.57	.49	.41	.34
230	1.34	1.24	1.14	1.09	1.05	1.00	.95	.91	.86	.82	.73	.65	.57	.49	.41
240	1.44	1.34	1.25	1.19	1.14	1.09	1.05	1.00	.95	.91	.82	.73	.65	.57	.49
250	1.55	1.44	1.34	1.29	1.24	1.19	1.14	1.09	1.05	1.00	.91	.82	.73	.65	.57
260	1.66	1.55	1.44	1.39	1.34	1.29	1.24	1.19	1.14	1.09	1.00	.91	.82	.73	.65
270	1.76	1.66	1.55	1.50	1.44	1.39	1.34	1.29	1.24	1.19	1.09	1.00	.91	.82	.73
280	1.87	1.76	1.66	1.60	1.55	1.50	1.44	1.39	1.34	1.29	1.19	1.09	1.00	.91	.82
290	1.99	1.87	1.76	1.71	1.66	1.60	1.55	1.50	1.44	1.39	1.29	1.19	1.09	1.00	.91
300	2.10	1.99	1.87	1.82	1.76	1.71	1.66	1.60	1.55	1.50	1.39	1.29	1.19	1.09	1.00

CORRECTION FACTORS FOR STEAM PRESSURES AND AIR TEMPERATURES OTHER THAN STANDARD

STEAM PRESSURE		ENTERING AIR TEMPERATURE °F														
GAUGE	ABS. PSI	TEMP. °F	45	55	STD 65	70	75	80	85	90	100	110	120	130	140	150
(VAC) 15" HG	7.32	178.9	0.90	0.80	0.70	0.65	0.60	0.56	0.51	0.45	0.39	0.32	0.25	0.18	0.13	0.08
(VAC) 10"	9.78	192.2	1.02	0.91	0.81	0.76	0.71	0.66	0.62	0.55	0.48	0.40	0.33	0.26	0.20	0.14
(VAC) 5"	12.25	202.9	1.11	1.00	0.90	0.85	0.79	0.75	0.70	0.63	0.56	0.48	0.40	0.33	0.27	0.20
0 PSI	14.696	212.0	1.19	1.09	0.97	0.92	0.87	0.82	0.77	0.70	0.63	0.54	0.46	0.38	0.31	0.25
▶ .899	15.595	215.0	1.22	1.11	1.00	0.95	0.90	0.84	0.80	0.75	0.65	0.57	0.48	0.40	0.33	0.26
5	19.70	227.1	1.34	1.22	1.11	1.05	1.00	0.95	0.90	0.81	0.75	0.66	0.57	0.49	0.41	0.34
10	24.70	239.4	1.45	1.33	1.22	1.17	1.11	1.05	1.00	0.91	0.85	0.75	0.66	0.58	0.50	0.42
15	29.70	249.8	1.55	1.43	1.31	1.26	1.20	1.14	1.09	1.00	0.94	0.84	0.75	0.66	0.57	0.49
20	34.70	258.5	1.63	1.52	1.40	1.33	1.28	1.23	1.17	1.07	1.02	0.92	0.82	0.73	0.64	0.55
25	39.70	266.8	1.71	1.59	1.47	1.41	1.36	1.30	1.25	1.15	1.09	0.98	0.89	0.80	0.71	0.62
30	44.70	274.0	1.78	1.66	1.54	1.48	1.42	1.37	1.31	1.21	1.15	1.05	0.95	0.85	0.76	0.68
40	54.70	286.7	1.91	1.79	1.66	1.61	1.54	1.49	1.43	1.32	1.27	1.16	1.06	0.97	0.87	0.78
50	64.70	297.7	2.02	1.90	1.77	1.71	1.65	1.60	1.54	1.42	1.37	1.26	1.16	1.06	0.96	0.87
60	74.70	307.3	2.10	2.00	1.87	1.81	1.75	1.69	1.63	1.51	1.47	1.35	1.25	1.15	1.05	0.95
70	84.70	316.0	2.20	2.09	1.95	1.89	1.83	1.77	1.71	1.59	1.55	1.44	1.33	1.23	1.12	1.03
80	94.70	323.9	2.27	2.17	2.03	1.97	1.91	1.85	1.80	1.69	1.63	1.52	1.41	1.31	1.20	1.10
90	104.70	331.2	2.36	2.24	2.11	2.05	1.98	1.93	1.87	1.74	1.70	1.59	1.48	1.38	1.28	1.17
100	114.70	337.9	2.43	2.31	2.18	2.11	2.05	2.00	1.94	1.81	1.77	1.65	1.54	1.44	1.33	1.23
125	139.70	352.9	2.59	2.47	2.33	2.27	2.21	2.16	2.10	1.96	1.92	1.80	1.69	1.59	1.48	1.38
150	164.70	365.9	2.73	2.62	2.47	2.43	2.35	2.29	2.23	2.08	2.05	1.94	1.82	1.72	1.61	1.51
175	189.70	377.4	2.86	2.74	2.60	2.54	2.47	2.41	2.35	2.21	2.17	2.05	1.95	1.85	1.73	1.63
200	214.70	387.8	2.95	2.85	2.71	2.63	2.58	2.52	2.47	2.31	2.29	2.17	2.06	1.96	1.84	1.75

From Keenan and Keyes — Linear Interpolation. NOTE: Gauge pressure should be corrected for altitude.

Rate of pitch for steam ½"drop over 20-foot run.

Design Data

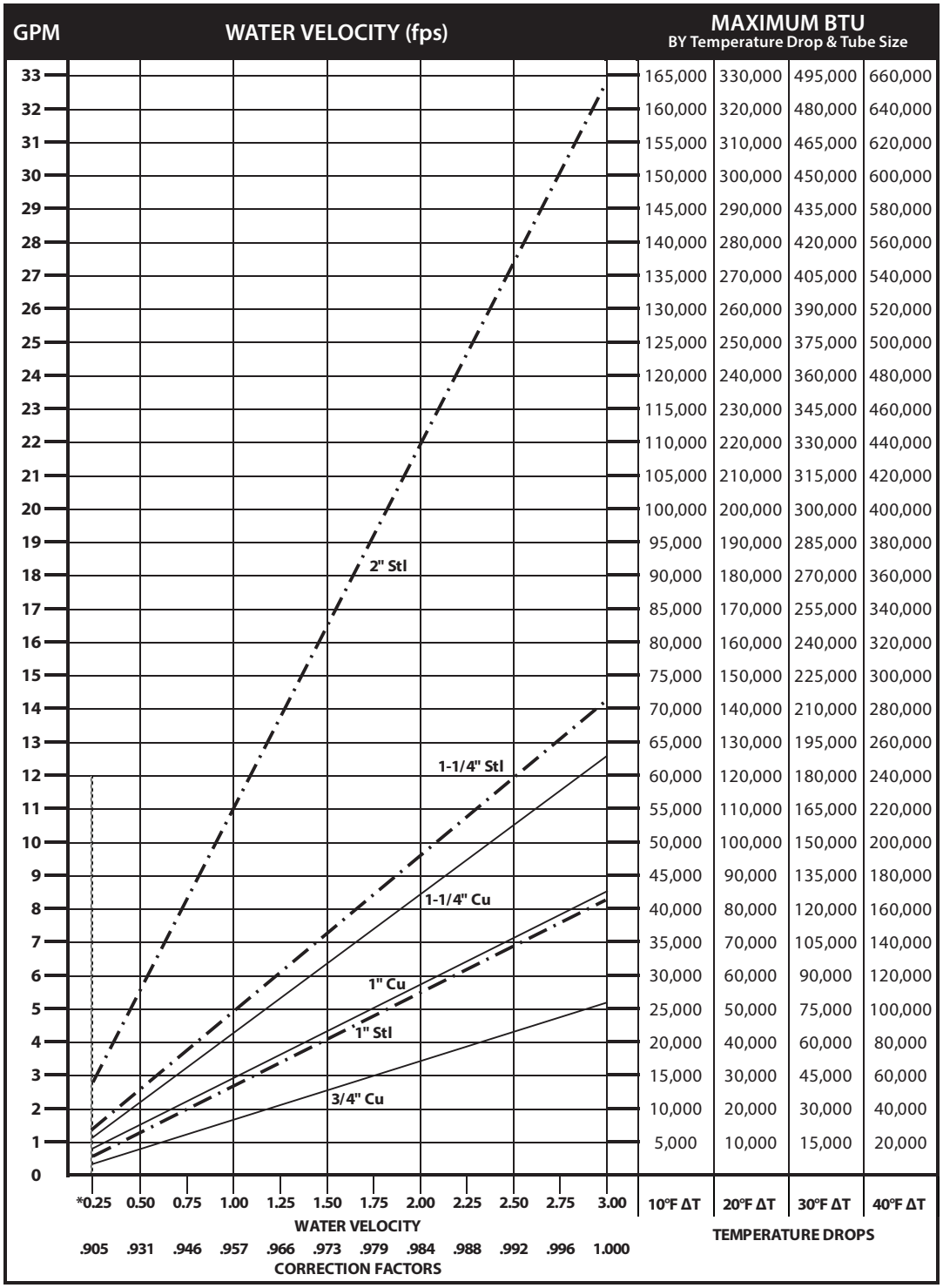

*Do not design below .25 fps.

DYNAMIC FORMULAS

BTU = GPM x 500 x TD

$$GPM = \left(\frac{BTU}{500}\right) \div TD$$

$$TD = \left(\frac{BTU}{500}\right) \div GPM$$

Pressure Drop at Given Water Velocities (Feet of Water per 100 ft. of pipe) based on Hazen - Williams calculation

Nominal Pipe Size	Water Velocity (ft/sec)											
	0.25	0.50	0.75	1.00	1.25	1.50	1.75	2.00	2.25	2.50	2.75	3.00
3/4" Copper	0.06	0.20	0.42	0.72	1.09	1.53	2.04	2.61	3.25	3.95	4.71	5.53
1" Copper	0.04	0.15	0.32	0.54	0.81	1.14	1.52	1.94	2.42	2.94	3.50	4.11
1 1/4" Copper	0.03	0.12	0.25	0.43	0.64	0.90	1.20	1.54	1.92	2.33	2.78	3.26
1" Steel	0.04	0.15	0.32	0.54	0.81	1.14	1.52	1.95	2.42	2.94	3.51	4.12
1 1/4" Steel	0.03	0.11	0.23	0.40	0.60	0.84	1.12	1.44	1.79	2.17	2.59	3.05
2" Steel	0.02	0.07	0.14	0.25	0.37	0.52	0.69	0.89	1.10	1.34	1.60	1.88

Design Data

GUARANTEED WORKING PRESSURES

1" IPS — 780 at Temperatures up to 650˚F.
1-1/4" IPS — 660 at Temperatures up to 650˚F.
2" IPS — 405 at Temperatures up to 650˚F.
1-1/4" CU — 194 at Temperatures up to 300˚F.
1" CU 204 at Temperatures up to 300˚F.
3/4" CU 218 PSI at Temperatures up to 300˚F.

MAXIMUM PRESSURES AT OTHER TEMPERATURES ARE AVAILABLE UPON REQUEST.

Pipe Water Capacities and Quantities Circulated at Velocity of 3 Feet Per Second

Nominal Pipe Size	Pipe I.D. (inches)	Gals Per Lin. Ft.	GPM @ 3' per sec Velocity
3/4" Copper	0.835	0.028	5.12
1" Copper	1.077	0.047	8.52
1 1/4" Copper	1.315	0.071	12.70
1" Steel	1.075	0.047	8.49
1 1/4" Steel	1.395	0.079	14.29
2" Steel	2.115	0.183	32.85

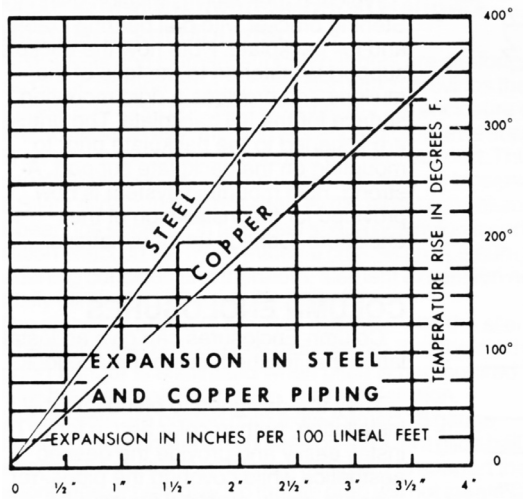

Glycol Correction Factors

Fluid Temperature 200°F

% Solution	Ethylene Glycol	Propylene Glycol
20	.952	.988
30	.921	.968
40	.888	.943
50	.852	.912

Fluid Temperature 180°F

% Solution	Ethylene Glycol	Propylene Glycol
20	.946	.982
30	.913	.961
40	.879	.934
50	.842	.902

Fluid Temperature 140°F

% Solution	Ethylene Glycol	Propylene Glycol
20	.934	.97
30	.898	.946
40	.861	.916
50	.821	.881

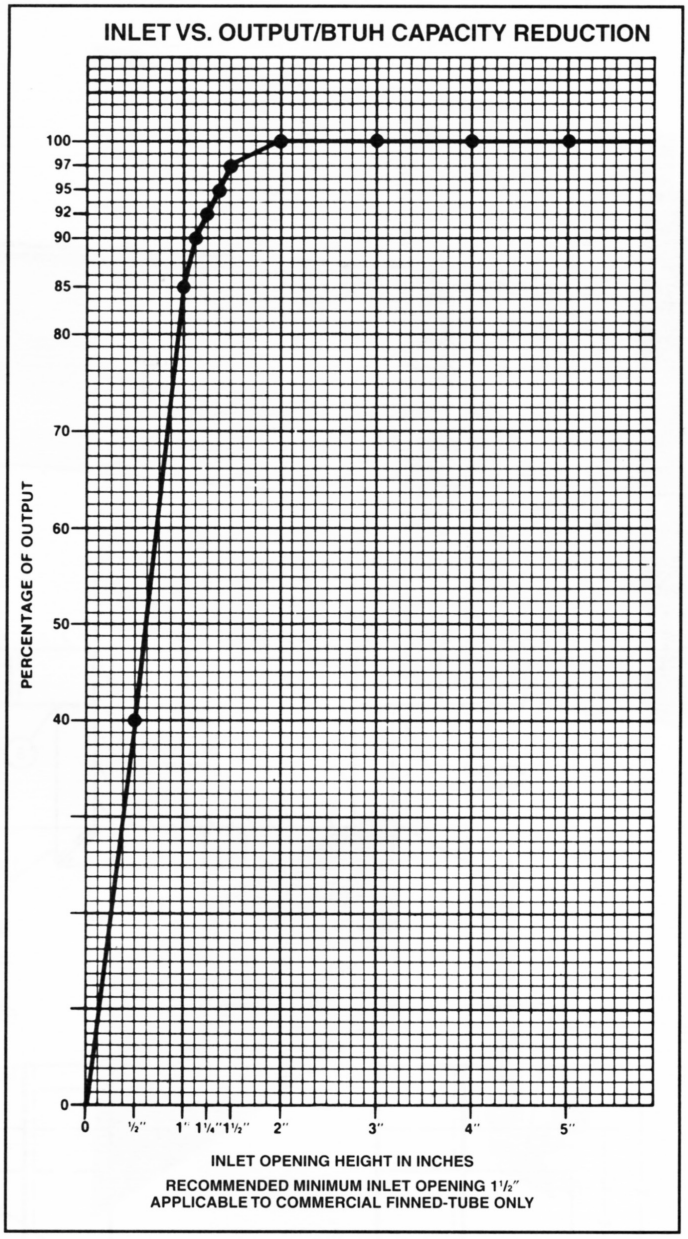

ALTITUDE FACTORS

Approximate factors for convective heat value at varying altitudes

Altitude	Ferrous Units	Copper Alum. Units
Sea Level	1.000	1,000
1,000 ft.	.984	.969
2,000 ft.	.968	.938
3,000 ft.	.952	.908
4,000 ft.	.936	.878
5,000 ft.	.920	.850
6,000 ft.	.904	.822
7,000 ft.	.889	.795
8,000 ft.	.874	.768
9,000 ft.	.859	.743
10,000 ft.	.844	.718
15,000 ft.	.771	.603
20,000 ft.	.703	.502